Problem Statement for Electronics Track

Havoltz Club

March 2026

1. Introduction

"Perfection is achieved, not when there is nothing more to add, but when there is nothing left to take away"

-Antoine de Saint-Exupéry

Welcome to the second edition of Voltaics, conducted by Havoltz. We are delighted to have all of you here and are truly elated to see so many participants with a genuine interest in electronics and hardware design. Your willingness to engage with a challenge of this nature reflects a curiosity and passion that lie at the heart of engineering. The problem statement you are about to tackle is intentionally demanding. It has been crafted by those who deeply appreciate the intricacies of electronic systems and the discipline required to design them.

Modern hardware design is rarely straightforward; it requires patience, attention to detail, and the ability to navigate complex technical constraints. This challenge reflects that reality. We hope that, as you work through it, you will share in that same appreciation for the craft of electronics. For those who successfully navigate the problem and arrive at a well-reasoned solution, you should take great pride in your accomplishment. Designing complex systems under time constraints is no small feat, and doing so demonstrates not only technical ability but also perseverance and disciplined thinking.

At the same time, if the solution proves elusive, do not view it as a personal shortcoming. Even those who designed this challenge encountered numerous obstacles while working through the same problem. In engineering, difficulty is not a sign of failure—it is often a sign that you are working on something meaningful and worth solving. We encourage you to approach the challenge with curiosity, determination, and an appreciation for the engineering process. Regardless of the outcome, the experience of thinking deeply about a complex system is itself valuable, and every attempt contributes to your growth as an engineer. We wish you the very best for the challenge ahead.

2. Motivation

Today's embedded systems are becoming increasingly powerful, small, and interconnected. The various applications of embedded systems, from robotics to automation to autonomous vehicles, to sophisticated consumer devices, etc., require high-performance computing while keeping the design small, power-constrained, and reliable. Building embedded systems from the ground up is certainly not a trivial task. High-performance processors have to be accompanied by high-speed interfaces, memory layout, power supply, etc., while the complexity of integrating these aspects into a single design is a challenge.

One of the most popular solutions to this problem is the System-on-Module (SoM) concept. SoM is a design approach where the most critical parts of a computing system are present on a small module. This module is then connected to a carrier board, which contains the application-specific interfaces. This design approach has greatly helped system designers to

reduce the complexity of the design process, thus allowing for faster prototyping and increasing the reliability of the system.

This is an exercise that challenges you to become a hardware systems designer. The goal is for you to design a System-on-Module that can accommodate an advanced processor and its associated high-speed interfaces, but also allow for access to necessary functions on a carrier board. With this exercise, you will be exposed to many of the same design challenges that an embedded computer systems designer would face.

3. Tools Required

Altium Designer – (Student edition)

Disclaimer - Neither Voltaics nor Havoltz is sponsored or associated in any way with Altium

Note – All necessary components for this challenge will be provided for the participants in pre-prepared Altium component library format. The participants will be allowed to make use of only the components provided in the library. The usage of other external libraries or components will not be permitted. Relevant documentation and datasheet of all components involved will also be provided to the participants

4. Problem Statement

In this challenge, the participants are given the task of designing a System on Module (SoM) based on the Rockchip RK3399 processor. The task is to design a SoC-based module that includes the core processor, memory, storage, and all the necessary infrastructure for the system to run, as well as a number of high-speed and peripheral interfaces to the carrier board via a high-density connector.

The System on Module must include the RK3399 processor as the main computing component. In order to support the processor's memory system, the System on Module must include two LP DDR4 SDRAM devices, each with a memory size of 2 GB, resulting in a total system memory of 4 GB. These memory devices must be connected to the processor's LP DDR4 interface while taking into consideration appropriate high-speed design issues. Apart from the volatile memory, the System on Module must also include 16 GB of eMMC storage, which will be used as the non-volatile storage device for system software and user data.

To enable the SoM to function as a reusable computing platform, a large number of processor interfaces must be made accessible to an external carrier board. These interfaces are to be routed through a 260-pin DIMM connector, allowing the carrier board to implement application-specific peripherals and connectors. The signals that must be exposed through this connector include the processor's embedded DisplayPort (eDP) interface, HDMI interface, MIPI interfaces, PCIe interface, CSI camera interface, DVP interface, 3X Analogs, and general-purpose I/O signals. In addition, peripheral communication interfaces such as I^2C, UART, and I^2S are also to be made available through the same connector to facilitate interaction with external devices.

The module must also incorporate several essential connectivity subsystems. A Gigabit Ethernet PHY must be connected to the processor through the RGMII interface to enable wired networking capabilities. The design must further include two USB Type-C connectors, one for flashing and debugging and the other to power the SoM, and two USB 2.0 host connectors, allowing the module to support high-speed peripheral connectivity. For wireless

communication, the system must integrate a Wi-Fi module on SDIO lines, capable of operating on both 2.4 GHz and 5 GHz bands, connected to the processor through an appropriate interface.

5. Block Diagram

5.1 System Block Diagram

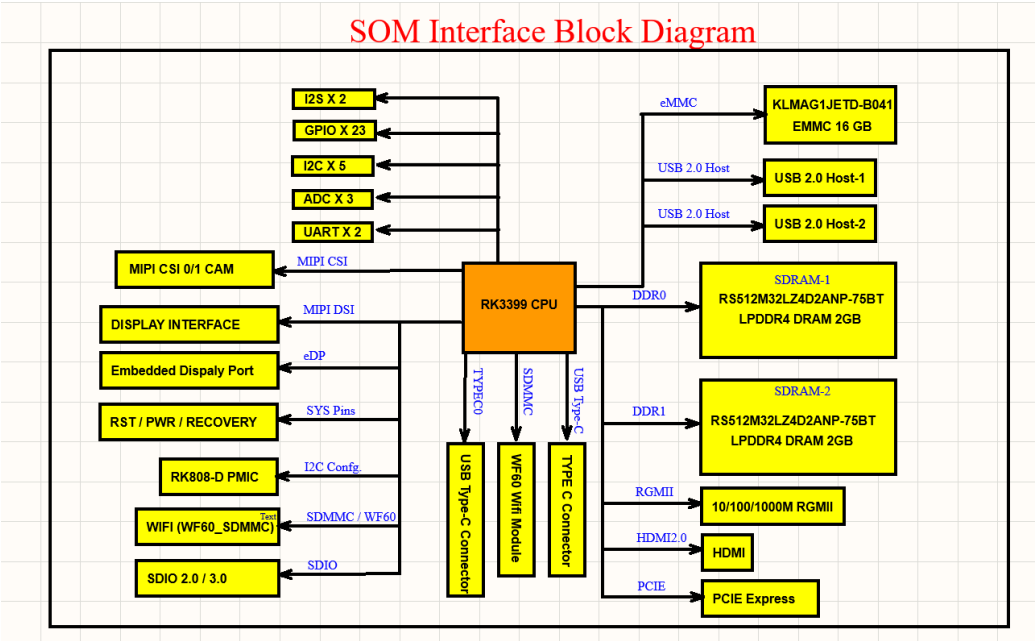

5.2 Power Tree Block Diagram

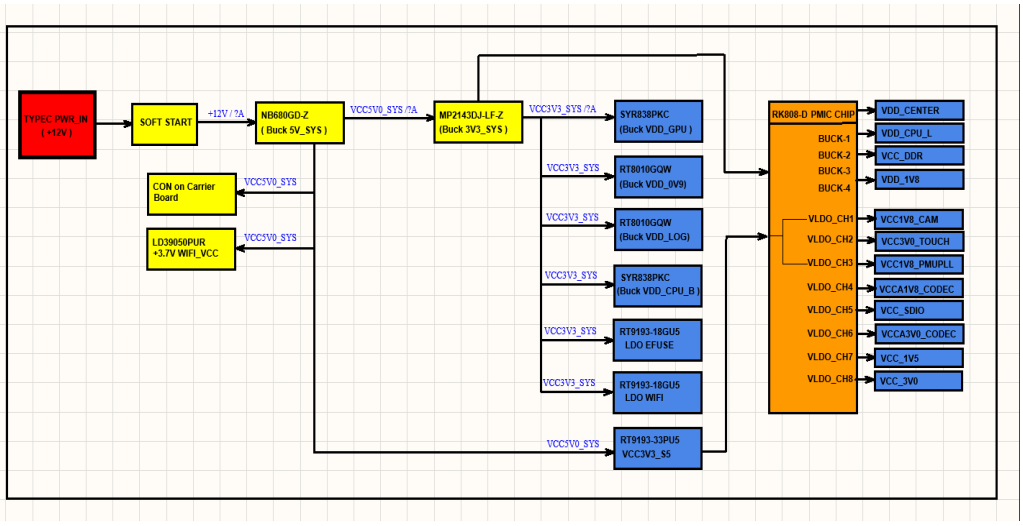

The overall system block diagram and power tree bock diagram have been provided to ease the process and understanding of the problem statement for all participants.

6. Deliverables

Each team ought to submit the following by the end of the hackathon

a) Altium project files
The complete Altium Designer project containing the schematic design and PCB layout of the proposed System-on-Module.
b) Bill of materials
A generated bill of materials listing all components used in the design.
c) Design documentation
A short document (1–2 pages) describing the system architecture, major design decisions, and any assumptions made during the design process

7. Bonus

Teams may submit screenshots of simulations in their documentation that demonstrate validation of critical aspects of their design. Examples of relevant simulations include

a) Power distribution network (PDN) simulation
Verification of voltage stability and current delivery for key power rails supplying the processor, memory, and peripherals.
b) Signal integrity analysis for high-speed interfaces
Simulation of impedance and signal quality for interfaces such as USB, PCIe, HDMI, or MIPI.
c) Transmission line impedance verification
Validation of controlled impedance routing for differential pairs and high-speed traces based on the selected PCB stack-up.
d) Power-Up behavior
Verification of regulator outputs and power rail behavior during steady-state operation.

8. Evaluation rubrics

a) System Architecture and Interface Integration (20 Points)
b) Schematic Design Quality (15 Points)
c) PCB Component Placement (15 Points)
d) High-Speed Routing and Signal Integrity Considerations (20 Points)
e) Power Distribution and Decoupling Strategy (10 Points)
f) DIMM Connector Interface Implementation (10 Points)
g) Documentation (10 Points)
h) Bonus (Additional 10 Points)